NPS-OR-03-002

NAVAL POSTGRADUATE SCHOOL
Monterey, California

OPTIMIZING ELECTRIC GRID DESIGN UNDER ASYMMETRIC THREAT

by

J. Salmeron and K. Wood, Naval Postgraduate School
R. Baldick, University of Texas at Austin

February 2003

Approved for public release; distribution is unlimited

Prepared for: U.S. Department of Justice Office of Justice Programs and Office of Domestic Preparedness, under the aegis of the Naval Postgraduate School Homeland Security Leadership Development Program

NAVAL POSTGRADUATE SCHOOL
MONTEREY, CA 93943-5000

RADM David R. Ellison, USN
Superintendent

Richard Elster
Provost

This report was prepared for the U.S. Department of Justice Office of Justice Programs and Office of Domestic Preparedness.

Reproduction of all or part of this report is authorized.

This report was prepared by:

JAVIER SALMERON
Research Assistant Professor of
Operations Research

KEVIN WOOD
Professor of Operations Research

ROSS BALDICK
Associate Professor of
Electrical Engineering
The University of Texas at Austin

Reviewed by:

R. KEVIN WOOD
Associate Chairman for Research
Department of Operations Research

Released by:

JAMES N. EAGLE
Chairman
Department of Operations Research

DAVID W. NETZER
Associate Provost and Dean of Research

REPORT DOCUMENTATION PAGE			Form Approved OMB No. 0704-0188
Public reporting burden for this collection of information is estimated to average 1 hour per response, including the time for reviewing instruction, searching existing data sources, gathering and maintaining the data needed, and completing and reviewing the collection of information. Send comments regarding this burden estimate or any other aspect of this collection of information, including suggestions for reducing this burden, to Washington headquarters Services, Directorate for Information Operations and Reports, 1215 Jefferson Davis Highway, Suite 1204, Arlington, VA 22202-4302, and to the Office of Management and Budget, Paperwork Reduction Project (0704-0188) Washington DC 20503.			
1. AGENCY USE ONLY ***(Leave blank)***	**2. REPORT DATE** February 2003	**1. AGENCY USE ONLY** ***(Leave blank)***	
4. TITLE AND SUBTITLE: Optimizing Electric Grid Design Under Asymmetric Threat			**5. FUNDING NUMBERS** 2002-GT-R-057
6. AUTHOR(S) Javier Salmeron, Kevin Wood and Ross Baldick			
7. PERFORMING ORGANIZATION NAME(S) AND ADDRESS(ES) Department of Computer Science Naval Postgraduate School 833 Dyer Road, Code CS Monterey, CA 93943-5118			**8. PERFORMING ORGANIZATION REPORT NUMBER** NPS-OR-03-002
9. SPONSORING /MONITORING AGENCY NAME(S) AND ADDRESS(ES) U.S. Department of Justice Office of Justice Programs 810 Seventh St., NW Washington, DC 20531			**10. SPONSORING/MONITORING AGENCY REPORT NUMBER**
11. SUPPLEMENTARY NOTES The views expressed in this thesis are those of the author and do not reflect the official policy or position of the Department of Defense or the U.S. Government.			
12a. DISTRIBUTION / AVAILABILITY STATEMENT Approved for public release; distribution is unlimited			**12b. DISTRIBUTION CODE**
13. ABSTRACT (Maximum 200 words.) This research develops analytical techniques to help improve the security of electric power grids subject to disruptions caused by terrorist attacks (and even by natural disasters). Our new bilevel mathematical models and optimization techniques identify critical system components (e.g., transmission lines, generators, transformers, and other power system elements) by creating maximally disruptive attack plans for terrorists who are assumed to have limited offensive resources. Results for standard, reliability-benchmark, test networks are presented. We also discuss trilevel models for actually selecting a set of budget-limited system upgrades that minimizes the potential for disruption.			
14. SUBJECT TERMS Homeland Security, Electric Power Grids, Network interdiction.			**15. NUMBER OF PAGES** 38 **16. PRICE CODE**
17. SECURITY CLASSIFICATION OF REPORT Unclassified	**18. SECURITY CLASSIFICATION OF THIS PAGE** Unclassified	**17. SECURITY CLASSIFICATION OF REPORT** Unclassified	**18. SECURITY CLASSIFICATION OF THIS PAGE** Unclassified

NSN 7540-01-280-5500

Standard Form 298 (Rev. 2-89)
Prescribed by ANSI Std. 239-18

OPTIMIZING ELECTRIC GRID DESIGN UNDER ASYMMETRIC THREAT

by

Javier Salmeron and Kevin Wood
Operations Research Department,
Naval Postgraduate School, Monterey, CA 93943-5001

Ross Baldick
Department of Electrical Engineering
University of Texas at Austin, Austin, TX, 78712-1084

Abstract

This research develops analytical techniques to help improve the security of electric power grids subject to disruptions caused by terrorist attacks (and even by natural disasters). Our new bilevel mathematical models and optimization techniques identify critical system components (e.g., transmission lines, generators, transformers, and other power system elements) by creating maximally disruptive attack plans for terrorists who are assumed to have limited offensive resources. Results for standard, reliability-benchmark, test networks are presented. We also discuss trilevel models for actually selecting a set of budget-limited system upgrades that minimizes the potential for disruption.

TABLE OF CONTENTS

1. INTRODUCTION **1**

2. OBJECTIVE **2**

3. APPROACH **3**

3.1 POWER-FLOW MODEL 4
3.2 INTERDICTION MODEL 5
3.3 INTERDICTION ALGORITHM 7

4. RESULTS **13**

4.1 IMPLEMENTATION 13
4.2 TEST CASE DESCRIPTION 13
4.3 INTERDICTION PLANS 13

5. VALUE OF THE RESEARCH TO HOMELAND SECURITY **19**

6. FUTURE WORK **20**

6.1 INTRODUCTION 20
6.2 FUNCTIONALITY AND MODELING 20
6.3 ALGORITHMS 21
6.4 DATA 22
6.5 EXTENSIONS 22

REFERENCES **24**

APPENDIX: TABLES OF RESULTS **25**

INITIAL DISTRIBUTION LIST **33**

1. INTRODUCTION

This document reports on the first phase of the research entitled "Homeland Security Research And Technology Proposal (Optimizing Electric Grid Design Under Asymmetric Threat)," which is sponsored by the U.S. Department of Justice, Office of Justice Programs and Office of Domestic Preparedness (2002-GT-R-057).

This research begins an effort, spanning several years, aimed at developing new optimization models and methods for planning expansion and enhancements of electrical power grids that improve robustness to potential disruptions caused by natural disasters, sabotage and, especially, terrorist attacks. The research reported here enables identification of critical grid components (which may include transmission lines, generators, transformers, and other power system elements) by identifying maximally disruptive, coordinated, terrorist attacks on an electrical power grid. We report results obtained using our techniques on standard, reliability-benchmark, test networks.

The document is organized as follows: Section 2 presents an overview of the project's objectives. Section 3 describes our approach to the problem, including the mathematical formulation of models and outlines of algorithms. Section 4 reports preliminary results of our models and methods applied to two medium-size power grids which are standard test-bed examples. Section 5 summarizes the value of this research with respect to the original call for proposals. Finally, Section 6 explains future goals and proposes extensions of this research.

2. OBJECTIVE

The United States' electrical power system is critical to the country's economy and security. The system's vulnerability to natural disasters or physical attacks has been recognized, but this vulnerability has been increasing in recent years because: (*a*) Infrastructure has not expanded as quickly as demand has, thereby reducing the "cushion" available when system components fail, and (*b*) the probability of terrorist attacks has increased. Our project develops new mathematical models and optimization methods for robust planning of electrical power grids, focusing on security and reliability with special emphasis on potential disruptions caused by terrorist attacks. As an incentive to spend the money necessary to make electric power grids more robust, we also want to demonstrate secondary economic benefits.

We refer to our proposal [Salmeron and Wood 2002] and references therein for detailed background on the problem of electric power-grid vulnerability. In that document, we establish short- and long-term goals for this research and its critical importance. The key motivation is: "The nation's electric power systems must clearly be made more resilient to terrorist attack" [Committee on Science and Technology for Countering Terrorism 2002].

In this initial research on the problem, we develop models and algorithms that can identify sets of system components whose proper functioning is key to meeting demand for electrical power. We focus on optimal interdiction, i.e., attack, of electric power grids, subject to limited interdiction resources. "Optimality" implies that the attack causes the largest possible disruption; "limited resources'' implies a set of combined attacks on system components that terrorists might reasonably carry out simultaneously. By studying how to attack power grids, we will ultimately understand how to protect them. By considering the largest disruptions that might be caused by a coordinated set of attacks, our proposed protection plans will be appropriately conservative. The discussion emphasizes terrorist attacks, but our techniques are also applicable to improving the security of electric power grids subject to natural disasters.

3. APPROACH

We have developed a preliminary interdiction model and an algorithm to solve the problem approximately. The interdiction model is a max-min (Mm) problem:

$$(Mm): \quad \max_{\delta \in \Delta} \min cy$$
$$\text{s.t.} \begin{cases} f(y,\delta) \le b \\ y \ge 0 \end{cases}$$

For a given interdiction plan δ, the inner problem is a power-flow model that minimizes generation costs plus the penalty associated with unmet demand, together denoted by *cy*. Here, *y* represents generation outputs, phase angles and power flows, as well as unmet demand, i.e., the amount of "load shed." The outer maximization attempts choose the most disruptive, resource-constrained interdiction plan $\delta \in \Delta$, where Δ is a discrete set. In this model, *f* will correspond to a set of functions that are nonlinear in (y,δ). In our preliminary DC model of the inner problem, *f*(*y*) (i.e., $f(y,\hat{\delta})$ for a given fixed $\hat{\delta}$), is, however, linear in *y*. However, when all the features of a power-flow model such as reactive power flows and losses are considered, *f*(*y*) becomes nonlinear even for a fixed $\hat{\delta}$.

At futures stages of our research (see Section 6) we will investigate:

- Linear approximations of the (Mm) problem, (L-Mm) that have the form:

$$(LMm): \quad \max_{\delta \in \Delta} \min cy$$
$$\text{s.t.} \begin{cases} Ay \le B\delta \\ y \ge 0 \end{cases}$$

  which are amenable to exact decomposition methods,

- Extensions of the (Mm) and (LMm) models to consider system restoration and unmet load over time,

- And, extensions of the (Mm) and (LMm) models to incorporate protective measures (PLMm):

$$(PLMm): \quad \min_{p \in P} dp + \max_{\delta \in \Delta(p)} \min cy$$
$$\text{s.t.} \begin{cases} A(p)y \le B(p)\delta \\ y \ge 0 \end{cases},$$

  where the new, third level of optimization over $p \in P$ represents protective measures to be taken in advance. These measures will influence the ability of terrorist to attack the grid via $\delta \in \Delta(p)$, and the subsequent power flows.

The mathematical modeling and algorithmic details of our research to date are explained in the remainder of this section. We first introduce our DC approximation of the power-flow model., and then present the formulation of the interdiction model. Finally, we introduce the algorithm we use for approximate solution of the combined power-flow/interdiction model.

3.1 Power-flow model

Our present implementation of a basic power-flow model is simplified to the so-called DC representation of the full AC model, which neglects reactive power effects. This entails various assumptions, many of which may be acceptable in the context of security analysis [e.g., Wood and Wollenberg 1996]. This model, hereafter called DC-OPF (DC-Optimal Power Flow), is specified below. The objective is to generate and distribute energy at minimum cost while simultaneously meeting demand as best possible, at a single instant of time. We later consider a time-phased model that considers the changing state of the network over time after an attack, and accumulates the penalty associated with unserved demand over time. In the eventual max-min interdiction model, the right-hand sides of the model's constraints will be modified through a set of interdiction variables.

Index sets and indices:

I	set of buses (i, k denote bus indices)
G_i	set of generators at bus i (g denotes a generator)
L	set of lines (l denotes a line)
L_i	set of lines connected to bus i
C	set of consumer sectors (c denotes a consumer sector)
S	set of substations (s denotes a consumer sector)
I_s	set of buses at substation s
L_s	set of lines at substation s (including transformers and lines connected to the substation)

(Remark: In this model, transformers can be represented by lines)

Parameters:

$o(l), d(l)$	origin and destination buses of line $l \in L$. Remark: More than one line with the same $o(l), d(l)$ may exist.
$i(g)$	bus for generator g, i.e., $g \in G_{i(g)}$
d_{ic}	load demand of consumer sector c at bus i
$\overline{P}_l^{Line}$	maximum flow (i.e., transmission capacity) on line $l \in L$
$\underline{P}_{i,g}^{Gen}, \overline{P}_{i,g}^{Gen}$	min and max power output from generator g at bus i, where $g \in G_i$
r_l	line resistance for $l \in L$
x_l	line reactance for $l \in L$ (we assume $x_l \gg r_l$).
B_l	series susceptance for line $l \in L$, calculated as $B_l = \dfrac{x_l}{r_l^2 + x_l^2}$

$f_{ic}(\cdot)$ load shedding cost function for customer sector c at bus i, e.g., for a segment set $H = \{1,2,3\}$, take $f_{ic}(s) = \sum_h \alpha_{ich} s_h$, where $0 \le \alpha_{ic1} \le \alpha_{ic2} \le \ldots$, $s = \sum_h s_h$, $s_h \ge 0$, and α_{ich} are the incremental shedding cost rates.

$h(P_{i,g}^{Gen})$ generation cost function for generator g at bus i, where $g \in G_i$

Decision variables:

$P_{i,g}^{Gen}$ generation from generator g at bus i, where $g \in G_i$

P_l^{Line} power flow on line $l \in L$

S_{ic} load shedding of customer sector c at bus i

θ_i phase angle at bus i

Formulation of DC-OPF:

$$\min_{P^{Gen}, P^{Line}, S, \theta} \underbrace{\sum_i \sum_{g \in G_i} h(P_{i,g}^{Gen}) + \sum_i \sum_c f(S_{ic})}_{F(P^{Gen}, S)},$$

subject to:

$$P_l^{Line} = B_l(\theta_{o(l)} - \theta_{d(l)}), \qquad \forall l \in L \qquad \text{(DC.1)}$$

$$\sum_{g \in G_i} P_{i,g}^{Gen} - \sum_{l|o(l)=i} P_l^{Line} + \sum_{l|d(l)=i} P_l^{Line} = \sum_c (d_{ic} - S_{ic}), \qquad \forall i \qquad \text{(DC.2)}$$

$$-\overline{P}_l^{Line} \le P_l^{Line} \le \overline{P}_l^{Line}, \qquad \forall l \in L \qquad \text{(DC.3)}$$

$$\underline{P}_{i,g}^{Gen} \le P_{i,g}^{Gen} \le \overline{P}_{i,g}^{Gen}, \qquad \forall i, \forall g \in G_i \qquad \text{(DC.4)}$$

$$0 \le S_{ic} \le d_{ic}, \qquad \forall i, c \qquad \text{(DC.5)}$$

DC-OPF minimizes generation plus shedding costs (penalties) in the objective function. Constraints (DC.1) approximate active power flows on the lines. Current-balance constraints at the buses are established in (DC.2). Constraints (DC.3) and (DC.4) set maximum line power flows and maximum and minimum outputs from each generating unit. (DC.5) states that the load shedding cannot exceed demand.

3.2 Interdiction model

The interdictor in our model, i.e., a group of terrorists, will make a coordinated set of resource-constrained interdictions (attacks) on the power grid. We make the following assumptions on the effect of each potential interdiction:

- Line interdiction: All lines running physically in parallel at the point of an attack are opened. (Typically, these lines are mounted on the same towers, and an attack on any one is an attack on all.)
- Transformer interdiction: When a transformer is attacked, the line representing the transformer is opened.
- Generator interdiction: When a generator is attacked, the generator is disconnected from the grid.

- Bus interdiction: When a bus is attacked, all the lines connected to the bus are opened, which in turn disconnects all generation from the bus and all loads connected to the bus.
- Substation interdiction: When a substation is interdicted, all the buses at the substation are disconnected, triggering other indirect effects.

Additional sets required:

$G_i^* \subseteq G_i$, $L^* \subseteq L$, $I^* \subseteq I$, $S^* \subseteq S$: set of interdictable generators at bus i, lines, buses, and substations, respectively

Additional parameters required:

$M_{i,g}^{Gen}$, M_l^{Line}, M_i^{Bus}, M_l^{Line}, M_i^{Bus}, M_s^{Sub} : amount of resource required to interdict generator $g \in G_i^*$ at bus i, line $l \in L^*$, bus $i \in I^*$ and substation $s \in S^*$, respectively.

M total interdiction resource

Interdiction variables:

$\delta_{i,g}^{Gen}, \delta_l^{Line}, \delta_i^{Bus}, \delta_s^{Sub}$: binary variable that takes the value 1 if generator $g \in G_i^*$, line $l \in L^*$, bus $i \in I^*$ and substation $s \in S^*$, respectively, is interdicted, and is 0 otherwise

Formulation of I-DC-OPF:

$$\max_{\delta^{Gen},\delta^{Line},\delta^{Bus},\delta^{Sub}} G(\delta^{Gen},\delta^{Line},\delta^{Bus},\delta^{Sub})$$

subject to:

$$\sum_{i\in I}\sum_{g\in G_i^*} M_{i,g}^{Gen}\,\delta_{i,g}^{Gen} + \sum_{l\in L^*} M_l^{Line}\,\delta_l^{Line} + \sum_{i\in I^*} M_i^{Bus}\,\delta_i^{Bus} + \sum_{s\in S^*} M_s^{Sub}\,\delta_s^{Sub} \le M \qquad \text{(I.1)}$$

$$\delta_{i,g}^{Gen} \in \{0,1\},\ \delta_l^{Line} \in \{0,1\},\ \delta_i^{Bus} \in \{0,1\},\ \delta_s^{Sub} \in \{0,1\},\quad \forall \text{ interdictable elements} \qquad \text{(I.2)}$$

where:

$$G(\delta^{Gen},\delta^{Line},\delta^{Bus},\delta^{Sub}) = \min_{P^{Gen},P^{Line},S,\theta} \underbrace{\sum_i\sum_{g\in G_i} h(P_g^{Gen}) + \sum_i\sum_c f(S_{ic})}_{F(P^{Gen},S)} \qquad \text{(IDC.0)}$$

subject to:

$$P_l^{Line} = (1-\delta_l^{Line})(1-\delta_{o(l)}^{Bus})(1-\delta_{d(l)}^{Bus})\left(\prod_{s|l\in L_s}(1-\delta_s^{Sub})\right)B_l\,(\theta_{o(l)}-\theta_{d(l)}),\ \forall l\in L \qquad \text{(IDC.1)}$$

$$\sum_{g\in G_i} P_{i,g}^{Gen} - \sum_{l|o(l)=i} P_l^{Line} + \sum_{l|d(l)=i} P_l^{Line} = \sum_c (d_{ic}-S_{ic}),\qquad \forall i \qquad \text{(IDC.2)}$$

$$-\overline{P}_l^{Line}(1-\delta_l^{Line}) \le P_l^{Line} \le \overline{P}_l^{Line}(1-\delta_l^{Line}),\qquad \forall l\in L \qquad \text{(IDC.3)}$$

$$(1-\delta_{i(g)}^{Bus})(1-\delta_{i,g}^{Gen})\underline{P}_{i,g}^{Gen} \le P_{i,g}^{Gen} \le (1-\delta_{i(g)}^{Bus})(1-\delta_{i,g}^{Gen})\overline{P}_{i,g}^{Gen},\ \forall i,\forall g\in G_i \qquad \text{(IDC.4)}$$

$$0 \le S_{ic} \le d_{ic}, \qquad \forall i,c \qquad \text{(IDC.5)}$$

The solution to I-DC-OPF maximizes disruption. Disruption is evaluated through the inner minimization problem that consists of a power-flow model like DC-OPF, but from which we have removed all the interdicted elements beforehand. At the upper level, (I.1) reflects the terrorists' options to interdict different combinations of elements in the network without exceeding their resources. (More complicated interdiction-resource constraints, or logical constraints on interdiction, are straightforward to incorporate.) (I.2) defines each individual terrorist option as a binary variable.

Equations (IDC.1)-(IDC.5) are analogs (DC.1)-(DC.5). Here, however, the elements that have been (directly or indirectly) interdicted are removed from the equations through the binary interdiction variables. For example, if a line *l* is connected to an interdicted substation *s* (that is, $\delta_s^{Sub} = 1$) then (IDC.1) for line *l* becomes: $P_l^{Line} = 0$.

The computational difficulty of the I-DC-OPF model stems from the max-min structure of the problem. (Constraints (IDC.4) can be linearized and do not present a problem.) The inner minimization is over a polytope that depends on δ. Solution of the inner minimization problem as a linearized function of δ yields a function that is convex in δ. Consequently, the outer maximization is over a convex function, which (as usual) is computationally difficult.

3.3 Interdiction algorithm

Future research will investigate the conversion of I-DC-OPF to a linear mixed-integer program which could be solved directly or through decomposition [Cormican et al. 1998]. At this juncture, we have devised a decomposition-based heuristic approach to obtain good (for the terrorist) interdiction plans, but not necessarily optimal ones. The heuristic is outlined in Figure 1, and details follow.

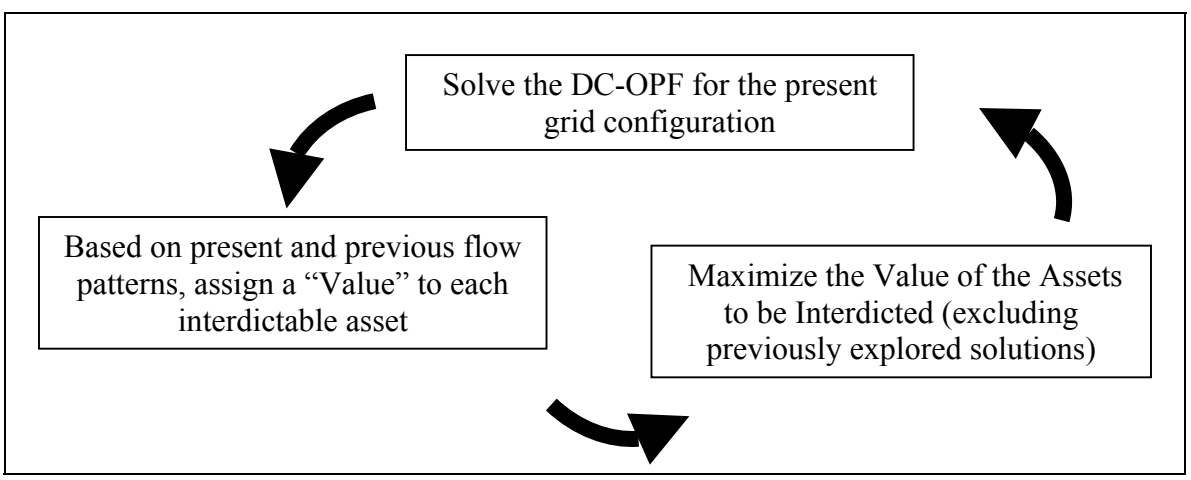

Figure 1: Interdiction algorithm framework

We begin by solving DC-OPF assuming no attacks. The result is an optimal power flow for normal operations, a flow that typically minimizes generation costs without shedding any load. The power-flow pattern is used to assign relative values (see below) to all the components of the power grid: generators, lines (and transformers represented by lines), buses and substations.

Then, we maximize the estimated value of the assets to be interdicted while ensuring that the resources required for the interdiction plan are not exceeded. With this plan, we modify the right-hand side of DC-OPF model and obtain its solution. The result is a power flow that again minimizes generation costs plus the penalty associated with load shedding: It is likely in this case the some load will indeed be shed since valuable assets (e.g., substations that were distributing electricity) have been removed from the grid.

The process continues by finding alternative sets of valuable assets to interdict that have not been identified at earlier iterations, and by evaluating load shedding for each of these interdiction plans. This algorithm may be viewed as a heuristic version of Benders decomposition [Geoffrion 1972] to solve the bilevel program (I-DC-OPF). This decomposition incorporates super-valid inequalities to eliminate previously generated solutions [Israeli and Wood 2002].

We next provide details of the two models required in the heuristic decomposition:

<u>Subproblem: DC-OPF for a specific interdiction plan</u>

Assume that at iteration t of our algorithm, a specific interdiction plan $\hat{\delta}^t = (\hat{\delta}^{Gen,t}, \hat{\delta}^{Line,t}, \hat{\delta}^{Bus,t}, \hat{\delta}^{Sub,t})$ is given; the superscript t is an iteration counter. The associated power-flow model DC-OPF($\hat{\delta}^t$), from equations (IDC.0)-(IDC.5), is the "subproblem" and its solution yields objective value $G(\hat{\delta}^{Gen,t}, \hat{\delta}^{Line,t}, \hat{\delta}^{Bus,t}, \hat{\delta}^{Sub,t})$ along with power flows, generation and unmet demand that are represented by $\hat{P}^t = (\hat{P}^{Line,t}, \hat{P}^{Gen,t}, \hat{S}^t, \hat{\theta}^t)$. (This vector is represented by y in the generic max-min model (Mm))

<u>Value specifications</u>

The solution $\hat{P}^t = (\hat{P}^{Line,t}, \hat{P}^{Gen,t}, \hat{S}^t, \hat{\theta}^t)$ provided by subproblem DC-OPF($\hat{\delta}^t$) serves to construct a list of uninterdicted elements in the power grid that is ordered in terms of "estimated attractiveness" for further interdiction. To determine the individual importance of each asset, we define a set of parameters which will represent, essentially, estimated coefficients for a "Benders cut" that will be added to the master problem. (In this heuristic, the "cut" is added to the master-problem objective rather than being added as a constraint; the super-valid inequalities give us the "cuts" that build up from iteration to iteration.) These parameters are:

$$F_i^{Into,t} = \sum_{\substack{l|o(l)=i \\ \wedge P_l^{Line}>0}} \hat{P}_l^{Line,t} + \sum_{\substack{l|d(l)=i \\ \wedge P_l^{Line}<0}} \left|\hat{P}_l^{Line,t}\right| \qquad \text{(total flow into bus } i\text{)}$$

$$F_i^{Out,t} = \sum_{\substack{l|o(l)=i \\ \wedge P_l^{Line}<0}} \left|\hat{P}_l^{Line,t}\right| + \sum_{\substack{l|d(l)=i \\ \wedge P_l^{Line}>0}} \hat{P}_l^{Line,t} \qquad \text{(total flow out of bus } i\text{)}$$

$$F_i^{Met,t} = \sum_c (d_{ic} - \hat{S}_{ic}^t) \qquad \text{(total demand met at bus } i\text{)}$$

$$V_g^{Gen} = w^{Gen} \hat{P}_g^{Gen,t} \qquad \text{(value of generator } g\text{)}$$

$$V_l^{Line,t} = w^{Line}\left(|\hat{P}_l^{Line,t}| + \sum_{\substack{l'|(l,l') \text{ are} \\ \text{in parallel}}} |\hat{P}_{l'}^{Line,t}| \right) \qquad \text{(value of line } l\text{)}$$

$$V_i^{Bus,t} = w^{Bus}\left(F_i^{Met,t} + F_i^{Out,t} \right) \qquad \text{(value of bus } i\text{)}$$

$$V_s^{Sub,t} = w^{Sub} \sum_{l|l \in L_s} |\hat{P}_l^{Line,t}| \qquad \text{(value of substation } s\text{)}$$

In these assignments, parameters $w^{Gen}, w^{Bus}, w^{Line}$ and w^{Sub} are given as input data to reflect preliminary estimates of value for each type of asset. By default, all of them can be set to one. However, computational experience indicates that the algorithm is more efficient when using values that provide higher incentives for attacks on buses and whole substations versus individual lines and generators, for example, $w^{Gen} = 2,\ w^{Bus} = 5, w^{Line} = 1, w^{Sub} = 5$.

An extended definition of value (that we have also exercised in our computations) incorporates the following two enhancements:

- The first modification divides the above-defined value of a given component (given in MW) by the amount of interdiction resources required to interdict it. The idea is to factor in not only the power flow that a specific asset supports, but also its relative importance with respect to the required resources to attack it. This value is given in MW/resource units.
- The second modification takes note that every time an asset is interdicted, the power flow through it is null. As a consequence, the asset does not appear as an attractive target at the (immediately) following iteration. To overcome this mismatch, we define the "cumulative value" of a specific asset as the average value of the asset throughout the iterations of the algorithm in which the asset was not interdicted. This, in turn, allows us to integrate all the iterations (instead of the last one only) into the value concept.

Mathematically, the new values are calculated as:

$$V_g^{Gen,t} = \frac{w^{Gen}}{M_g^{Gen}} \sum_{\substack{t'|t' \le t \wedge \\ \hat{\delta}_g^{Gen,t'} = 0}} \hat{P}_g^{Gen,t} \qquad \text{(value of generator } g\text{)}$$

$$V_l^{Line,t} = \frac{w^{Line}}{M_l^{Line}} \sum_{\substack{t'|t' \le t \wedge \\ \hat{\delta}_l^{Line,t'} = 0}} \left(|\hat{P}_l^{Line,t}| + \sum_{\substack{l'|(l,l') \text{ are} \\ \text{in parallel}}} |\hat{P}_{l'}^{Line,t}| \right) \qquad \text{(value of line } l\text{)}$$

$$V_i^{Bus,t} = \frac{w^{Bus}}{M_i^{Bus}} \sum_{\substack{t'|t' \le t \wedge \\ \hat{\delta}_i^{Bus,t'} = 0}} \left(F_i^{Met,t} + F_i^{Out,t} \right) \qquad \text{(value of bus } i\text{)}$$

$$V_s^{Sub,t} = \frac{w^{Sub}}{M_s^{Sub}} \sum_{\substack{t'|t' \le t \wedge \\ \hat{\delta}_s^{Sub,t'} = 0}} \sum_{l|l \in L_s} |\hat{P}_l^{Line,t}| \qquad \text{(value of substation } s\text{)}$$

Remark: For the purpose of calculations, if an indirect interdiction occurs (e.g., a line is not attacked but it is connected to an interdicted bus), we assume in the computations above, that all $\hat{\delta}$ variables related to the attacked asset and to all the indirectly attacked assets are set to one.

<u>Master Problem: Finding the most valuable interdiction</u>

Let us assume that a set of estimated values for each element of the grid, $V^t = \left(V_g^{Gen,t}, V_l^{Line,t}, V_i^{Bus,t}, V_s^{Sub,t}\right)$, has been calculated at iteration *t*. Let us also define the vector of previously generated interdiction plans, $\hat{\Delta}^t = (\hat{\delta}^1, ..., \hat{\delta}^{t-1})$. The interdiction master problem is then:

$\mathrm{MP}(V^t, \hat{\Delta}^t)$:

$$\max_{\substack{\delta^{Gen,t}, \delta^{Line,t}, \\ \delta^{Bus,t}, \delta^{Sub,t}}} \quad \sum_{i \in I} \sum_{g \in G_i^*} V_g^{Gen,t} \delta_{i,g}^{Gen,t} + \sum_{l \in L^*} V_l^{Line,t} \delta_l^{Line,t} + \sum_{i \in I^*} V_i^{Gen,t} \delta_i^{Gen,t} + \sum_{s \in S^*} V_s^{Sub,t} \delta_s^{Sub,t}$$

subject to:

$$\sum_{i \in I} \sum_{g \in G_i^*} M_{i,g}^{Gen} \, \delta_{i,g}^{Gen,t} + \sum_{l \in L^*} M_l^{Line,t} \, \delta_l^{Line,t} + \sum_{i \in I^*} M_i^{Bus,t} \, \delta_i^{Bus,t} + \sum_{s \in S^*} M_s^{Sub,t} \, \delta_s^{Sub,t} \le M \quad \text{(MP.1)}$$

$$\delta_{i,g}^{Gen,t} \in \{0,1\}, \; \delta_l^{Line,t} \in \{0,1\}, \; \delta_i^{Bus,t} \in \{0,1\}, \; \delta_s^{Sub,t} \in \{0,1\}, \quad \forall \text{ interdictable elements} \quad \text{(MP.2)}$$

$$\delta_{i,g}^{Gen,t} + \delta_i^{Bus,t} \le 1, \quad \forall g \in G_i^*, \forall i \in I \quad \text{(MP.3)}$$

$$\delta_l^{Line,t} + \delta_i^{Bus,t} \le 1, \quad \forall l \in L_i \cap L^*, \forall i \in I \quad \text{(MP.4)}$$

$$\delta_l^{Line,t} + \delta_{l'}^{Line,t} \le 1, \quad \forall l, l' \in L^* \,|\, l, l' \text{ in parallel} \quad \text{(MP.5)}$$

$$\delta_i^{Bus,t} + \delta_s^{Sub,t} \le 1, \quad \forall i \in I_s \cap I^*, \forall s \in S \quad \text{(MP.6)}$$

$$\delta_l^{Line,t} + \delta_s^{Sub,t} \le 1, \quad \forall l \in L_s \cap L^*, \forall s \in S \quad \text{(MP.7)}$$

$$\sum_{i \in I} \sum_{\substack{g \in G_i^* | \\ \hat{\delta}_{i,g}^{Gen,t'} = 1}} \delta_{i,g}^{Gen,t} + \sum_{\substack{l \in L^* | \\ \hat{\delta}_l^{Line,t'} = 1}} \delta_l^{Line,t} + \sum_{\substack{i \in I^* | \\ \hat{\delta}_i^{Bus,t'} = 1}} \delta_i^{Bus,t} + \sum_{\substack{s \in S^* | \\ \hat{\delta}_s^{Sub,t'} = 1}} \delta_s^{Sub,t} \le$$
$$\sum_{i \in I} \sum_{\substack{g \in G_i^* | \\ \hat{\delta}_{i,g}^{Gen,t'} = 1}} \hat{\delta}_{i,g}^{Gen,t'} + \sum_{\substack{l \in L^* | \\ \hat{\delta}_l^{Line,t'} = 1}} \hat{\delta}_l^{Line,t'} + \sum_{\substack{i \in I^* | \\ \hat{\delta}_i^{Bus,t'} = 1}} \hat{\delta}_i^{Bus,t'} + \sum_{\substack{s \in S^* | \\ \hat{\delta}_s^{Sub,t'} = 1}} \hat{\delta}_s^{Sub,t'} - 1, \quad \forall t' < t \quad \text{(MP.8)}$$

The objective function of $\mathrm{MP}(V^t, \hat{\Delta}^t)$ attempts to maximize our estimated value of interdicted resources.

Constraints (MP.1) and (MP.2) are analogous to (I.1) and (I.2) in the I-DC-OPF model.

(MP.3) through (MP.7) serve the following purposes, respectively: Interdict a generator or the bus that it is connected to, but not both; interdict a line or the bus that it is connected to, but not both; if in parallel, interdict one line or another, but not both; interdict a bus or the substation that it belongs to, but not both; and, interdict a line or the substation that it is connected to, but not both.

Of course, the reason for this exclusion is that the objective function treats the different elements as individual items with their own value (disregarding that an interdiction may trigger other indirect interdictions). Thus, these constraints avoid unnecessary use of resources to destroy elements of the grid that have been effectively interdicted as a consequence of other interdictions.

Finally, (MP.8) ensures that the interdiction plan chosen at the incumbent iteration is different from any other plan from previous iterations. This equation is a little more restrictive than the following alternative:

$$\begin{aligned}
&\sum_{i\in I}\sum_{\substack{g\in G_i^*|\\ \hat{\delta}_{i,g}^{Gen,t'}=1}} \delta_{i,g}^{Gen,t} + \sum_{\substack{l\in L^*|\\ \hat{\delta}_l^{Line,t'}=1}} \delta_l^{Line,t} + \sum_{\substack{i\in I^*|\\ \hat{\delta}_i^{Bus,t'}=1}} \delta_i^{Bus,t} + \sum_{\substack{s\in S^*|\\ \hat{\delta}_s^{Sub,t'}=1}} \delta_s^{Sub,t} \\
&-\sum_{i\in I}\sum_{\substack{g\in G_i^*|\\ \hat{\delta}_{i,g}^{Gen,t'}=0}} \delta_{i,g}^{Gen,t} - \sum_{\substack{l\in L^*|\\ \hat{\delta}_l^{Line,t'}=0}} \delta_l^{Line,t} - \sum_{\substack{i\in I^*|\\ \hat{\delta}_i^{Bus,t'}=0}} \delta_i^{Bus,t} - \sum_{\substack{s\in S^*|\\ \hat{\delta}_s^{Sub,t'}=0}} \delta_s^{Sub,t} \le \\
&\quad \sum_{i\in I}\sum_{\substack{g\in G_i^*|\\ \hat{\delta}_{i,g}^{Gen,t'}=1}} \hat{\delta}_{i,g}^{Gen,t'} + \sum_{\substack{l\in L^*|\\ \hat{\delta}_l^{Line,t'}=1}} \hat{\delta}_l^{Line,t'} + \sum_{\substack{i\in I^*|\\ \hat{\delta}_i^{Bus,t'}=1}} \hat{\delta}_i^{Bus,t'} + \sum_{\substack{s\in S^*|\\ \hat{\delta}_s^{Sub,t'}=1}} \hat{\delta}_s^{Sub,t'} - 1, \quad \forall t' < t
\end{aligned} \tag{MP.8-II}$$

At iteration t, (MP.8-II) deems feasible an attack consisting of all of the attacked elements at a previous iteration t' plus new elements. (MP.8) assumes that no superset of a set of once-interdicted elements will ever be interdicted, because we believe the master problem will typically consume all available resource in finding a set of elements to interdict, and no superset can therefore be feasible. Only (MP.8) has been tested at this time.

The solution to $\text{MP}(V^t, \hat{\Delta}^t)$ is denoted $\hat{\delta}^t = (\hat{\delta}^{Gen,t}, \hat{\delta}^{Line,t}, \hat{\delta}^{Bus,t}, \hat{\delta}^{Sub,t})$ and it is used in the subproblem to start a new iteration of the algorithm. The algorithm is described next.

I-ALG: Interdiction Algorithm

Input data:

Problem data (grid data, interdiction data)
T (maximum number of iterations)

Initialization:

Set $t = 0$ (iteration counter) and $\hat{\delta}^0 = (\hat{\delta}^{Gen,0}, \hat{\delta}^{Line,0}, \hat{\delta}^{Bus,0}, \hat{\delta}^{Sub,0}) = (0,0,0,0)$.
Set $\hat{\delta}^* = \hat{\delta}^0$ and υ^*(DC-OPF)=0 (best interdiction plan so-far)

Subproblem:

Solve DC-OPF($\hat{\delta}^t$). Denote its objective function value by

$$\upsilon(DC-OPF(\hat{\delta}^t)).$$

If $\upsilon(DC-OPF(\hat{\delta}^t)) > \upsilon^*(DC-OPF)$, assign

$$\upsilon^*(\text{DC-OPF}) \leftarrow \upsilon(DC-OPF(\hat{\delta}^t)) \text{ and } \hat{\delta}^* \leftarrow \hat{\delta}^t.$$

Assign $t \leftarrow t+1$. If $t > T$, STOP.

Master problem:

Calculate the vector of estimated values, V^t, and update $\hat{\Delta}^t = (\hat{\delta}^1, ..., \hat{\delta}^{t-1})$.

Solve $\mathrm{MP}(V^t, \hat{\Delta}^t)$.

If $\mathrm{MP}(V^t, \hat{\Delta}^t)$ is infeasible, STOP. Otherwise, return to Subproblem.

Output:

The resulting $\hat{\delta}^*$ is a feasible interdiction plan with associated cost $\upsilon^*(\mathrm{SP})$. If the algorithm exits at the master problem step (i.e., $\mathrm{MP}(V^t, \hat{\Delta}^t)$ is infeasible), it means that all the feasible solutions have been enumerated, and $\hat{\delta}^*$ are therefore optimal.

4. RESULTS

4.1 Implementation

We have applied the I-ALG algorithm developed in this research to two test networks drawn from the 1996 reliability test system (RTS) [IEEE Reliability Test Data, 1999-I, 1999-II].

Tests are carried out on a 1 GHz desktop PC with 1GB of RAM. The I-ALG algorithm is implemented using GAMS [2003]. The subproblems and master problems are solved using CPLEX [GAMS-CPLEX 2003].

We set a limited number of iterations, $T = 500$, because the computational complexity of the master problem increases as the number of iterations grows (the number of constraints in (MP.8) increases by one at every iteration). In fact, computational experience shows that little improvement in solution quality is achieved after 100 iterations, with the best solution-quality versus time tradeoff occurring between 50 and 100 iterations.

4.2 Test case description

The RTS examples are not intended to represent a particular system but, rather, a general reference grid that contains (to a certain extent) the different technologies and configurations that exist in any power grid. Figures 2 and 3 represent the RTS-One Area, whereas Figure 4 is the RTS-Two Areas, which merges two areas by incorporating three interconnections.

Labels next to lines and buses are just for the purpose of identifying elements as they appear in IEEE Reliability Test Data [1999-I, 1999-II], where more specific details can be consulted. The figures inside the circles indicate the number of generation units at the bus and their maximum output. (Figure 5 shows only the aggregated output.) Next to each arrow we specify the total load at the corresponding bus.

In addition to grid data, we assume that terrorists have limited resources to simultaneously interdict multiple elements of the grid, and that these terrorists will complete their actions successfully. For simplicity of exposition, suppose that the terrorists' resources can be quantified as six people (for RTS One-Area) and twelve people (for RTS Two-Areas), and that one person is required to attack any line (except buried cable lines, that cannot be interdicted, and lines representing transformers that require two people), two people can attack an individual generator, and three people can attack any bus or substation (including the large substation in the middle of the figure). In general, the concept of terrorist "resources" can accommodate the available information from intelligence sources, whether it is specific as in this example, or generic, such as "any three attacks might happen." Also, for simplicity, we measure the effect of a set of attacks through the total load (demand for electricity) that must be shed (left unmet); if this load were not shed at the operation control level, cascading outages and a complete system blackout could occur.

4.3 Interdiction plans

Our algorithm finds many attack plans for RTS-One Area, from which we choose the following two to look at more closely: "Plan A" (Figure 2) attacks the substation and three selected lines, shedding 1,258 MW (44.1% of the total load), and "Plan B" (Figure 3) attacks six selected

transmission lines, shedding 1,373 MW (48.2%). Plan B sheds more instantaneous load than Plan A, but we must estimate the total amount of unsupplied energy while the effects of the attack last. Our algorithm I-ALG does not take this aspect into consideration yet. Doing so entails establishing time lines, or "time regimes," for repair, and evaluating the resulting load-shedding patterns and their cost, over time. In our example, the 115 MW of additional "short-term" load shedding in Plan B may be negligible when compared to the long-term disruption caused by destroying the four transformers in the large substation, which presumably could not be replaced or repaired quickly.

Figure 4 depicts results for the RTS-Two Areas test problem. Note that 2,516 MW (44.1%) of load is shed. This means that the terrorists can interdict a bit less than twice as much power by using twice as many terrorists in a grid that is "twice as big" as the original. The three interconnection tie lines (one of which is also interdicted) make up for the small but significant difference.

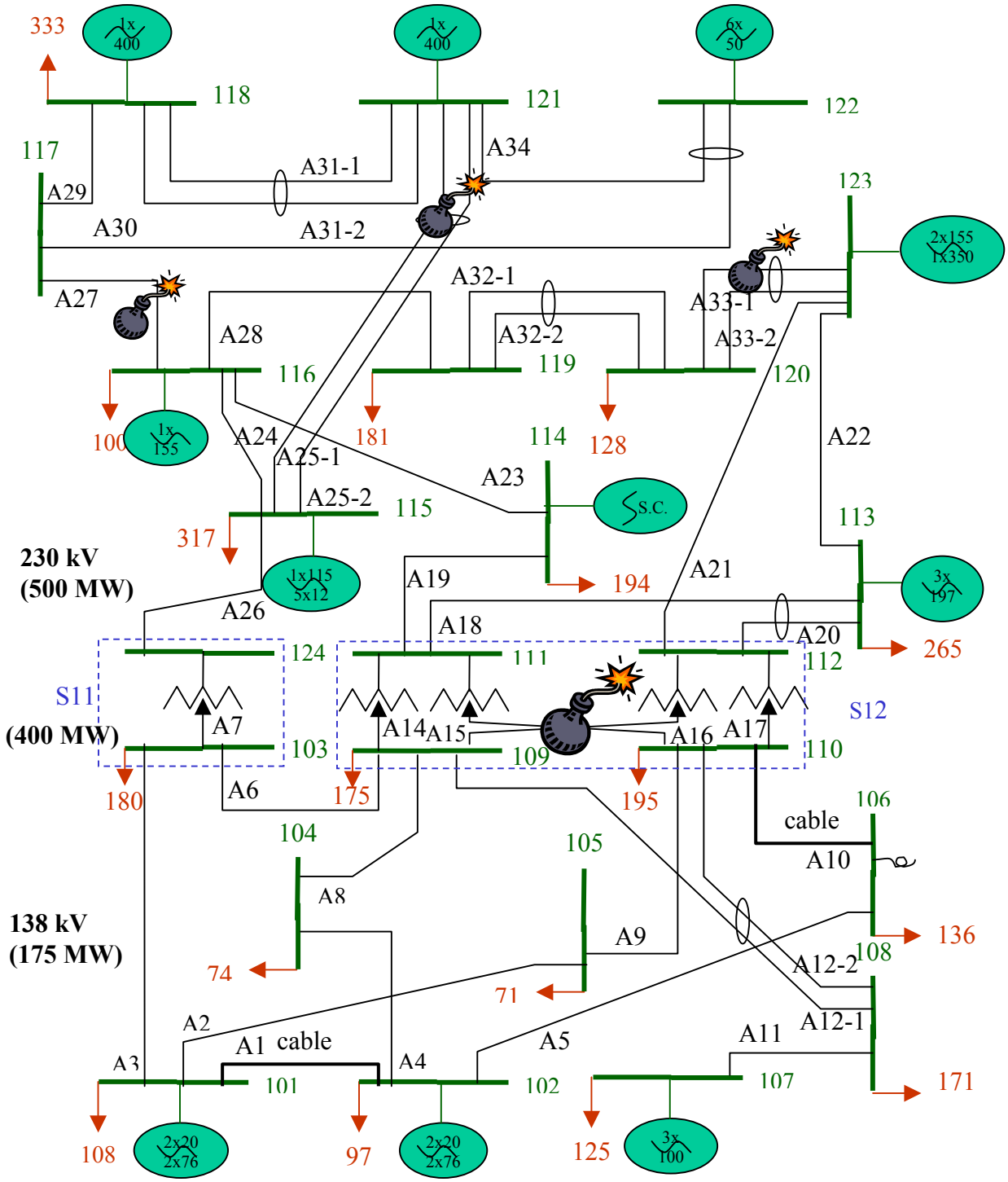

Figure 2. IEEE RTS-One Area (Plan A). Total Load: 2,850 MW. Resources: Six terrorists, Load Shedding: 1,258 MW.

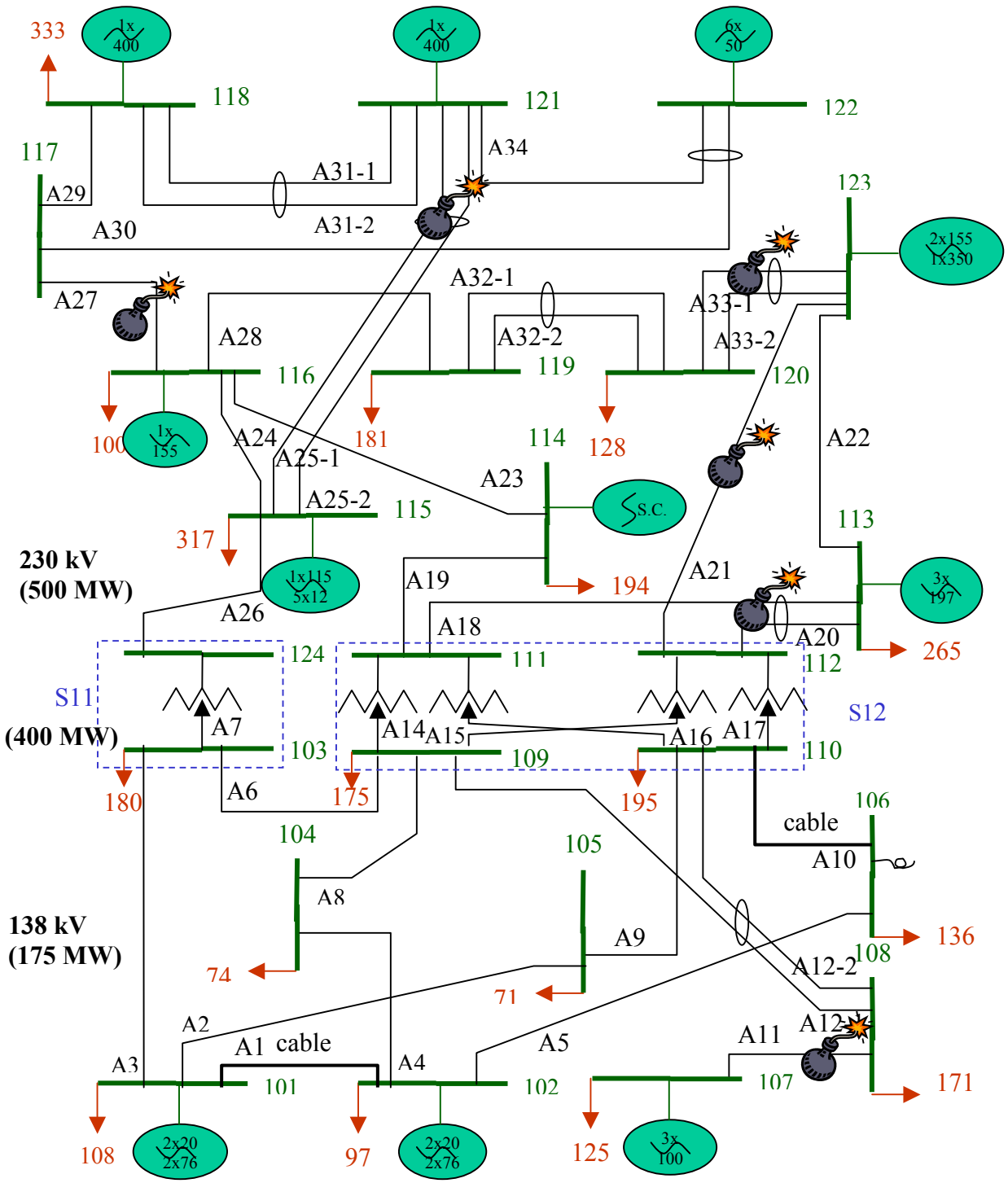

Figure 3. IEEE RTS-One Area (Plan B). Total Load: 2,850 MW. Resources: Six terrorists. Load Shedding: 1,373 MW.

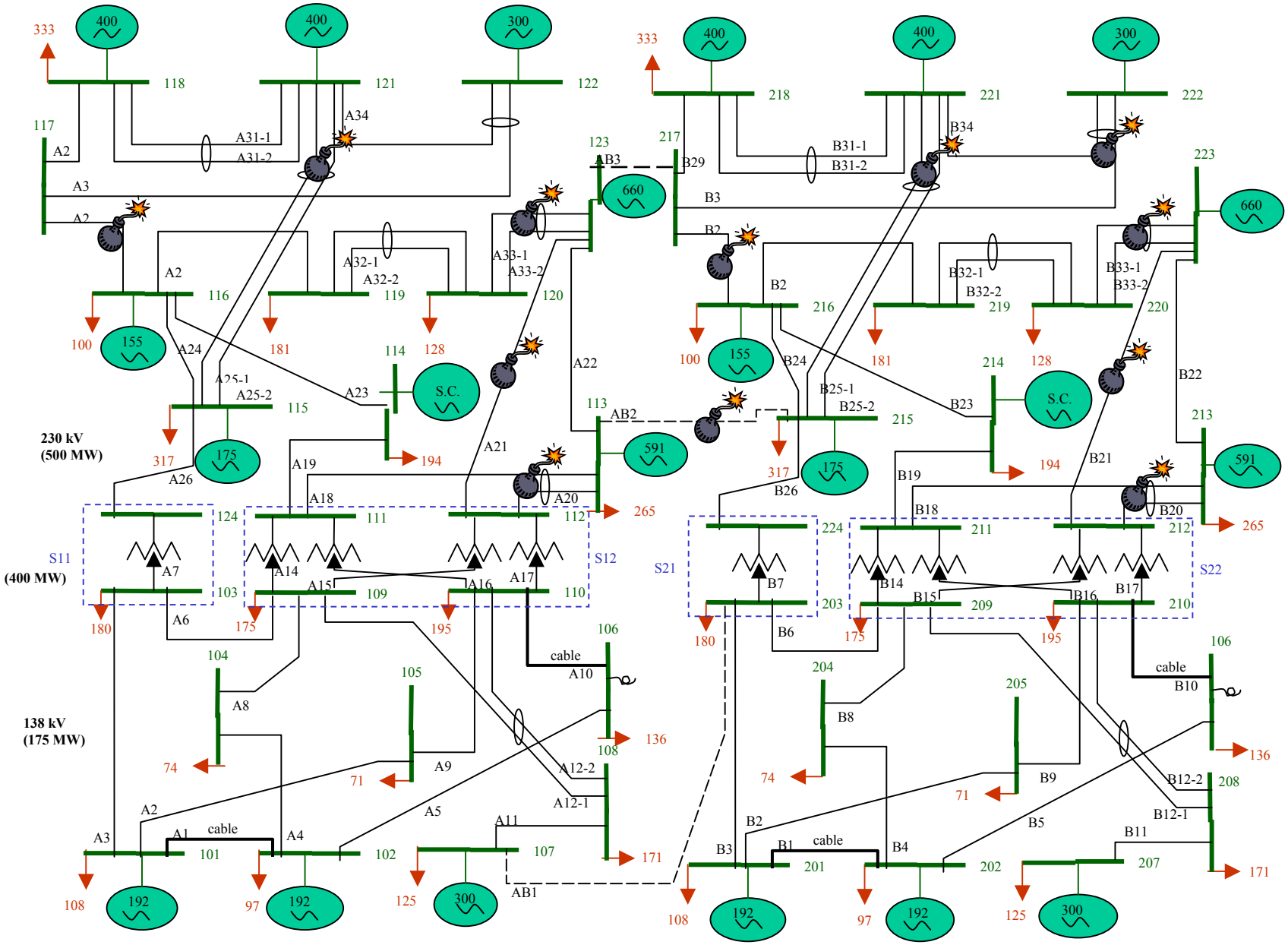

Figure 4. IEEE RTS (Two Areas). Total Load: 5,700 MW. Resources: 12 terrorists. Load Shedding: 2,516 MW.

Figure 5 shows the amount of load shed in each grid when interdiction resources vary from zero to forty terrorists. As expected, the amount of load shed is a monotonically non-decreasing function of the number of terrorists. Actually, that this expected result does occur lends credence to the accuracy of our optimization algorithm: If the heuristic were poor, we would expect to see the load shed to drop occasionally with increased interdiction resources.

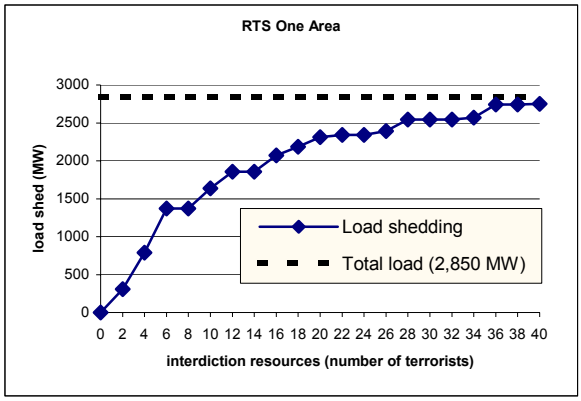

Figure 5-A: Load shedding for RTS-One Area by number of terrorists. Total load is 2,850 MW.

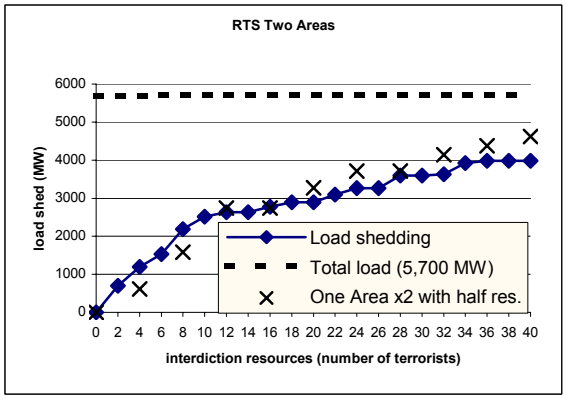

Figure 5-B: Load shedding for RTS-Two Areas by number of terrorists. Total load is 5,700 MW. The results is also compared to twice the load shed in the One-Area case using half the number of terrorists.

Figure 5. RTS-One Area and RTS-Two Areas. Load shedding for different interdiction resources

In the One-Area case we observe that using 28 terrorists or more results in at least 90% of the total load being shed (Figure 5-A). For the most part, the Two-Areas case (Figure 5-B) is more difficult to interdict when compared to the One-Area case for twice the amount of interdiction resource. For example, we can shed 2,311MW in the One-Area case using 20 terrorists, whereas only 4,000 MW can be shed in the Two-Area case using 40 terrorists. In this sense, the interconnection lines play an important role in decreasing the impact of the attacks. However, we observe the opposite effect if the number of terrorist is small. In this case, there is little damage that, for example, two terrorists can cause in the One-Area case. However, in comparison, four terrorists may cause more damage in the Two-Areas case because they can still focus on the weak links of a single area

5. VALUE OF THE RESEARCH TO HOMELAND SECURITY

The call for proposals that this research addresses, asks how our research adds value to the Homeland Security effort. We respond as follows:

Simulation software for HLS:
- Attacks on critical infrastructure: Power Grids

Deliverables (this document):
- Models and algorithms (as presented)
- Case studies (as presented)
- Software (under development)
- Publications (future work)

By criterion used to fund the project:
- This research addresses an important problem in HLS
- This research adds to the body of HLS knowledge
- This research is interdisciplinary
- This research is novel and useful
- This research invites non-NPS collaborators
- PIs have a reputation in the proposed field of study
- PIs will try to get students involved in this research and produce theses
- Results will be publishable
- Results will be useful in teaching HLS courses
- PIs believe the budget is in line with the expected results

6. FUTURE WORK

6.1 Introduction

Many technical and functional issues remain for future work, and they include:

A) Modeling: Power restoration over time will be modeled, along with short-term and long-term economic effects. Approximate "load curves" may be incorporated as well as contingency constraints, losses and/or reactive power flows, and short-term commitment issues. The non-convex bilevel models will be convexified for solution via direct integer-programming techniques.

B) Algorithms: Optimal branch-and-bound solutions must be compared to heuristically obtained solutions; "dynamic penalties" will be investigated in convexified models; and non-heuristic decomposition algorithms for bilevel interdiction will be designed and tested.

C) Data: Additional benchmark test-system data are required, such as the test beds available from the websites http://www.cesac.howard.edu and http://www.usna.edu/EPNES . We are attempting to obtain (disguised) data for real-world power grids in the US, will investigate intelligence reports on terrorist methods and resources, and will identify potential protective measures and their costs.

D) Extensions: The bilevel interdiction model will be extended to a trilevel "protection model" that explicitly models potential system upgrades for better security. It will also incorporate the market benefits of such upgrades to offset the cost of upgrades. Of course, algorithms will be developed to solve these models.

We describe some of this future work in more detail, next.

6.2 Functionality and Modeling

We realize that our current model's static representation of power disruption at a given point in time does not fully represent the consequences of a terrorist attack. The inaccuracy of this approximation depends on two major factors:

1) Variability in the repair times of damaged system components, and to a lesser degree,
2) Daily and weekly variability in demand.

The two interdiction plans A and B (shown in Figures 2 and 3, respectively) demonstrate the first factor. Plan A (attacking the substation and three selected lines) results in less instantaneous load-shedding than Plan B (attacking six selected lines). However, can the latter be considered the worst-case scenario? In order to answer this question, we must estimate the total amount of unsupplied energy while the effects of the attack last. This entails establishing time lines, or "time regimes," for repair, and evaluating the resulting load-shedding patterns, or their cost, over time, as represented in Figure 6.

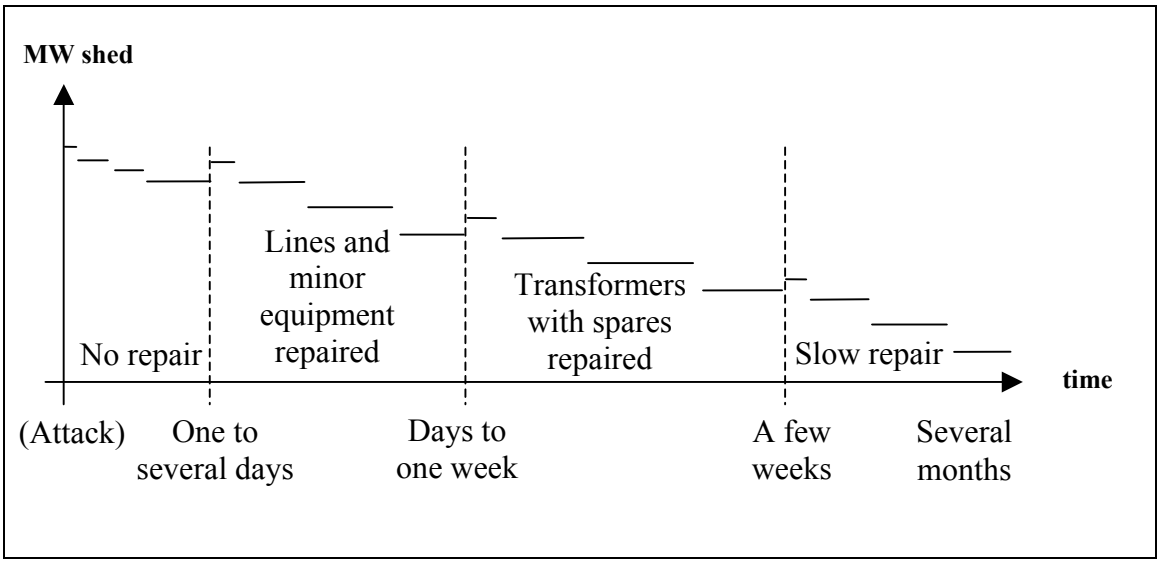

Figure 6: Time regimes for repair and their (approximated) load-duration curves.

Following up on the question as to whether Plan B was actually more disruptive than Plan A in Figure 1, we may no longer be sure that this is the case. The 115 MW of additional "short-term" load shedding in Plan B might be negligible when compared to the long-term disruption caused by destroying the four transformers at the large substation. This example shows the need to include repair time as a decisive component of the interdiction problem.

We may also enhance some technical aspects of the basic power-flow model. For example, our present implementation of this model does not represent contingency constraints and disregards reactive power flows, which may be particularly important in cases where reactive support at substations has been disabled as part of an attack on a substation. (Contingency constraints require that the grid be operated in such a way that no single failure will cause any load to be shed.) This entails various assumptions, many of which may be acceptable in the context of security analysis [Wood and Wollenberg 1996], but more precise modeling may be necessary.

6.3 Algorithms

Keeping pace with the modeling work, new effort is required to improve the computational efficiency of the algorithms developed to solve those models. As is normally the case in large-scale models, we must find a compromise between model accuracy and tractability. And, of course, the extent to which we can rely on exact methodologies will depend on how we aggregate levels of decisions and incorporate new modeling features. Mathematically, we also need to characterize exact optimality, or find tight bounds on maximum error.

As an example of the research to be carried out here, we note that our basic min-max model (Mm), after proper linearization, can be converted to:

$$\max_{\delta \in \Delta} \min cy + \delta^T B^T Ps$$

$$\text{s.t.} \begin{cases} Ay \le Is \\ y, s \ge 0 \end{cases}$$

where P is a diagonal matrix of penalties which represent upper bounds on dual variables [Morton and Wood 1999]. The inner minimization is now a concave problem in δ and can be readily solved: The model can be converted to a mixed-integer program and solved directly, if it is not too large. (Note: The conversion just described is typically referred to as "convexification," although it is actually "concavification" in this case.)

However, the penalties represented by P are not easy to define in this complicated power-flow situation: If they are too large the model will be difficult to solve; and if they are too small, an incorrect solution will obtained, perhaps with no indication that it is incorrect [Israeli and Wood 2002]. We will pursue the topic of "dynamic penalties" where small initial penalties are defined and are increased within the branch-and-bound algorithm, as needed.

6.4 Data

Our current and future interdiction models and algorithms must be tested using data derived from real-world systems. An important effort must be devoted to obtaining such data from our contacts in the electrical power industry and to carrying out this testing. We realize that this task may not be easy, and anticipate that many utilities will be reluctant to provide this information if our work is ultimately going to be disclosed publicly. Initial discussion with representatives of Reliant Energy in Houston, Texas indicates that such concerns do, indeed, exist.

6.5 Extensions

In addition to physical data of real systems in the US, we need to collect information on plausible terrorist attacks, as well as initiate our research on protective systems by identifying and gathering data on actions that can be taken to increase security (e.g., maintaining spare transformers, hardening substations, etc.) and their costs.

Learning the best way to attack electric grids allows us to better analyze how to defend them. However, the first difficulty here is to determine a realistic set of protective measures, or "measure types" for consideration, from which our optimization analysis can recommend a specific of actions to undertake.

Mathematically, this entails adding a third level in the hierarchy of decisions to be made:

$$\min_{p \in P} dp + \max_{\delta \in \Delta(p)} \min cy$$
$$\text{s.t.} \begin{cases} A(p)y \le B(p)\delta \\ y \ge 0 \end{cases}$$

In the above model, $p \in P$ represents the set of feasible protective measures, whose cost is represented by d. Accordingly, terrorist will determine their strategy, $\delta \in \Delta(p)$, and the (improved) electric system will calculate optimal power flows and load-shedding patterns after the attack

The plausibility of implementing different protective measures depends on the extent to which governments, utilities and consumers are willing to bear the costs of all or part of these measures.

In general, expensive protective measures are unattractive when threats are deemed low, but such measures may make sense from the perspective of national security. Our ultimate goal is still to analyze how best to improve the grid reliability, but we must explore reasonable tradeoffs between security and cost.

How do we make the costs of improving security more palatable? In many parts of the United States today, a restructuring of the electricity industry has led to an increased role of wholesale markets for electricity. An important ingredient of successful electricity markets is the availability of transmission to allow various generation resources to compete to sell energy. The transmission capability necessary for a vibrant market is typically more than was required in the pre-restructured industry; however, in most jurisdictions there has been little new transmission construction in the last decade. Enhanced transmission capability may be able to deliver both increased security under an attack scenario and also greater access by competitors under normal conditions. If such benefits can be reasonably quantified, then they can be incorporated as an offset against the cost of transmission upgrades for security enhancement. We plan to incorporate market effects in our models at a later date.

REFERENCES

Baldick, R., Salmeron, J. and Wood, K. (2002). "Electric Power Grids Vulnerability," presentation in CS4920, Homeland Security Seminar. Naval Postgraduate School, 3 December.

Birge, J. and Louveaux, F. (1997). *Introduction to Stochastic Programming*. Springer-Verlag, New York.

Cormican, K., Morton, D. and Wood, K. (1998). "Stochastic Network Interdiction," *Operations Research*, Vol. 46, pp. 184-197

GAMS (2003). Software available from www.gams.com (accessed January 2003)

GAMS-CPLEX (2003). http://www.gams.com/solvers/solvers.htm#CPLEX (accessed January, 2003)

Geoffrion, A.M. (1972). "Generalized Benders Decomposition," *Journal of Optimization Theory and Applications*, Vol. 10, pp. 237-260.

Israeli, E. and Wood, I. (2002). "Shortest-Path Network Interdiction," *Networks*, Vol. 40, pp. 97-111.

Morton, D. and Wood, K. (1999). "Restricted-Recourse Bounds for Stochastic Linear Programming," *Operations Research*, Vol. 47, pp. 943-956

IEEE Reliability Test Data (1999-I). "The IEEE Reliability Test System – 1996," *IEEE Transactions. on Power Systems*, Vol. 14, pp. 1010-1020.

IEEE Reliability Test Data (1999-II). Data available from http://www.ee.washington.edu/research/pstca/rts/pg_tcarts.htm

Committee on Science and Technology for Countering Terrorism (2002). "Making the Nation Safer. The Role of Science and Technology in Countering Terrorism," National Research Council, National Academy Press, Washington, D.C.

Salmeron, J. and Wood, K. (2002). "Homeland Security Research And Technology Proposal (Optimizing Electric Grid Design Under Asymmetric Threat)," Naval Postgraduate School.

A.J. Wood and B.F. Wollenberg (1996). *Power Generation, Operation and Control*. Second Edition. John Wiley and Sons, New York.

Appendix: Tables of Results

IEEE RTS-One Area (Plan B). Total Load: 2,850 MW. Resources: 6 terrorists.
Load Shedding: 1,373 MW

```
Worst Shedding case: DCOPF after interdiction of:
                                    Line: A11
                                    Line: A18
                                    Line: A20          (indirect interdiction)
                                    Line: A21
                                    Line: A25-1
                                    Line: A25-2        (indirect interdiction)
                                    Line: A27
                                    Line: A33-1        (indirect interdiction)
                                    Line: A33-2

Bus    Phase  Gen.   Gen.   Load   Load   Gen.   Shed   Line  Flow   Flow   Line  Flow   Flow
name   angle  name   (MW)   met    shed   ($/h)  ($/h)  name  from   (MW)   name   to    (MW)
-----------------------------------------------------------------------------------------------

101     -2.07 (All)     192    108      0   6632      0
             101U20-    20                 2100
             101U20-    20                 2100
             101U76-    76                 1216
             101U76-    76                 1216
                                                   (All flow in)    52
                                                   A1    102        52
                                                                         (All flow out)  136
                                                                         A2    103         7
                                                                         A3    105       128

102     -1.63 (All)     192     28     69   6632  69000
             102U20-    20                 2100
             102U20-    20                 2100
             102U76-    76                 1216
             102U76-    76                 1216
                                                   (All flow in)     0
                                                                         (All flow out)  164
                                                                         A1    101        52
                                                                         A4    104        46
                                                                         A5    106        66

103     -3.03 (All)       0      0    180      0 180000
                                                   (All flow in)    70
                                                   A2    101         7
                                                   A7    124        63
                                                                         (All flow out)   70
                                                                         A6    109        70

104     -5.22 (All)       0      0     74      0  74000
                                                   (All flow in)    46
                                                   A4    102        46
                                                                         (All flow out)   46
                                                                         A8    109        46

105     -8.74 (All)       0     71      0      0      0
                                                   (All flow in)   128
                                                   A3    101       128
                                                                         (All flow out)   57
                                                                         A9    110        57

106     -9.39 (All)       0      0    136      0 136000
                                                   (All flow in)    66
                                                   A5    102        66
                                                                         (All flow out)   66
                                                                         A10   110        66

107      0.00 (All)     125    125      0   6875      0
             107U100    80                 4400
             107U100     0                    0
             107U100    45                 2475
                                                   (All flow in)     0
                                                                         (All flow out)    0

108    -18.62 (All)       0    171      0      0      0
                                                   (All flow in)   171
                                                   A12-1 109       104
                                                   A13-2 110        67
                                                                         (All flow out)    0
```

```
109     -8.16 (All)       0      0    175      0 175000
                                                 (All flow in)   142
                                                 A6    103        70
                                                 A8    104        46
                                                 A14   111        25
                                                                    (All flow out)  142
                                                                    A12-1 108       104
                                                                    A15   112        38

110    -11.82 (All)       0    195      0      0      0
                                                 (All flow in)   262
                                                 A9    105        57
                                                 A10   106        66
                                                 A16   111       101
                                                 A17   112        38
                                                                    (All flow out)   67
                                                                    A13-2 108        67

111     -6.96 (All)       0      0      0      0      0
                                                 (All flow in)   126
                                                 A19   114       126
                                                                    (All flow out)  126
                                                                    A14   109        25
                                                                    A16   110       101

112     -9.99 (All)       0      0      0      0      0
                                                 (All flow in)    38
                                                 A15   109        38
                                                                    (All flow out)   38
                                                                    A17   110        38

113      0.00 (All)       0    265      0      0      0
             113U197     0                     0
             113U197     0                     0
             113U197     0                     0
                                                 (All flow in)   265
                                                 A22   123       265
                                                                    (All flow out)    0

114     -3.88 (All)       0      0    194      0 194000
             114SC       0                     0
                                                 (All flow in)   126
                                                 A23   116       126
                                                                    (All flow out)  126
                                                                    A19   111       126

115      1.91 (All)     215      0    317   5915 317000
             115U12-    12                   780
             115U12-    12                   780
             115U12-    12                   780
             115U12-    12                   780
             115U12-    12                   780
             115U155   155                  2015
                                                 (All flow in)     0
                                                                    (All flow out)  215
                                                                    A24   116       152
                                                                    A26   124        63

116      0.41 (All)     155      0    100   2015 100000
             116U155   155                  2015
                                                 (All flow in)   152
                                                 A24   115       152
                                                                    (All flow out)  307
                                                                    A23   114       126
                                                                    A28   119       181

117      1.01 (All)       0      0      0      0      0
                                                 (All flow in)   124
                                                 A30   122       124
                                                                    (All flow out)  124
                                                                    A29   118       124

118      0.00 (All)       0    333      0      0      0
             118U400     0                     0
                                                 (All flow in)   333
                                                 A29   117       124
                                                 A31-1 121       105
                                                 A31-2 121       105
                                                                    (All flow out)    0
```

```
119     -2.02 (All)       0    181      0      0      0
                                                   (All flow in)   181
                                                   A28   116       181
                                                                       (All flow out)    0

120     -2.02 (All)       0      0    128      0 128000
                                                   (All flow in)     0
                                                                       (All flow out)    0

121      1.58 (All)      33      0      0    231      0
             121U400     33                 231
                                                   (All flow in)   176
                                                   A34   122       176
                                                                       (All flow out)  209
                                                                       A31-1 118       105
                                                                       A31-2 118       105

122      8.58 (All)     300      0      0    150      0
             122U50-     50                  25
             122U50-     50                  25
             122U50-     50                  25
             122U50-     50                  25
             122U50-     50                  25
             122U50-     50                  25
                                                   (All flow in)     0
                                                                       (All flow out)  300
                                                                       A30   117       124
                                                                       A34   121       176

123     13.42 (All)     265      0      0   3445      0
             123U155    110                 1430
             123U155    155                 2015
             123U350      0                    0
                                                   (All flow in)     0
                                                                       (All flow out)  265
                                                                       A22   113       265

124      0.00 (All)       0      0      0      0      0
                                                   (All flow in)    63
                                                   A26   115        63
                                                                       (All flow out)   63
                                                                       A7    103        63
-------------------------------------------------------------------------------------------
Totals:       Gen.     1477   1477   1373  31895 1.4E+6 flow in        2522 flow out       2522
```

IEEE RTS-Two Areas. Total Load: 5,700 MW. Resources: 12 terrorists.
Load Shedding: 2,516 MW

```
Worst Shedding case: DCOPF after interdiction of:
                                     Line: A18          (indirect interdiction)
                                     Line: A20
                                     Line: A21
                                     Line: A25-1
                                     Line: A25-2        (indirect interdiction)
                                     Line: A27
                                     Line: A33-1
                                     Line: A33-2        (indirect interdiction)
                                     Line: B18          (indirect interdiction)
                                     Line: B20
                                     Line: B21
                                     Line: B25-1        (indirect interdiction)
                                     Line: B25-2
                                     Line: B27
                                     Line: B30
                                     Line: B33-1
                                     Line: B33-2        (indirect interdiction)
                                     Line: B34          (indirect interdiction)
                                     Line: AB2

Bus    Phase  Gen.   Gen.   Load   Load   Gen.   Shed   Line  Flow   Flow   Line  Flow   Flow
name   angle  name   (MW)   met    shed   ($/h)  ($/h)  name  from   (MW)   name   to    (MW)
-------------------------------------------------------------------------------------------------

101      1.76 (All)     192      0    108   6632 108000
             101U20-     20                 2100
             101U20-     20                 2100
             101U76-     76                 1216
             101U76-     76                 1216
                                                   (All inflow)      8
```

```
                                                    A1    102         8
                                                                   (All outflow)   200
                                                                   A2    103        87
                                                                   A3    105       113

102      1.83 (All)     192      0     97   6632  97000
              102U20-    20                2100
              102U20-    20                2100
              102U76-    76                1216
              102U76-    76                1216
                                                    (All inflow)      0
                                                                   (All outflow)   192
                                                                   A1    101         8
                                                                   A4    104       116
                                                                   A5    106        68

103     -9.46 (All)       0      0    180      0 180000
                                                    (All inflow)     87
                                                    A2    101        87
                                                                   (All outflow)    87
                                                                   A6    109         5
                                                                   A7    124        82

104     -7.15 (All)       0     74      0      0      0
                                                    (All inflow)    116
                                                    A4    102       116
                                                                   (All outflow)    42
                                                                   A8    109        42

105     -4.11 (All)       0     71      0      0      0
                                                    (All inflow)    113
                                                    A3    101       113
                                                                   (All outflow)    42
                                                                   A9    110        42

106     -6.21 (All)       0     64     72      0  72000
                                                    (All inflow)     68
                                                    A5    102        68
                                                                   (All outflow)     4
                                                                   A10   110         4

107      7.29 (All)     240      0    125  13200 125000
              107U100    80                4400
              107U100    80                4400
              107U100    80                4400
                                                    (All inflow)      0
                                                                   (All outflow)   240
                                                                   A11   108       175
                                                                   AB1   203        65

108      0.75 (All)       0      0    171      0 171000
                                                    (All inflow)    175
                                                    A11   107       175
                                                                   (All outflow)   175
                                                                   A12-1 109       104
                                                                   A13-2 110        71

109     -9.79 (All)       0    175      0      0      0
                                                    (All inflow)    186
                                                    A6    103         5
                                                    A8    104        42
                                                    A12-1 108       104
                                                    A15   112        35
                                                                   (All outflow)    11
                                                                   A14   111        11

110     -6.38 (All)       0      0    195      0 195000
                                                    (All inflow)    117
                                                    A9    105        42
                                                    A10   106         4
                                                    A13-2 108        71
                                                                   (All outflow)   117
                                                                   A16   111        82
                                                                   A17   112        35

111    -10.31 (All)       0      0      0      0      0
                                                    (All inflow)     93
                                                    A14   109        11
                                                    A16   110        82
                                                                   (All outflow)    93
                                                                   A19   114        93
```

```
112     -8.08 (All)       0      0      0      0      0
                                                         (All inflow)     35
                                                         A17   110        35
                                                                             (All outflow)    35
                                                                             A15   109        35

113      0.00 (All)       0    265      0      0      0
             113U197     0                    0
             113U197     0                    0
             113U197     0                    0
                                                         (All inflow)    265
                                                         A22   123       265
                                                                             (All outflow)     0

114    -12.58 (All)       0      0    194      0 194000
             114SC       0                    0
                                                         (All inflow)     93
                                                         A19   111        93
                                                                             (All outflow)    93
                                                                             A23   116        93

115    -15.92 (All)     215    317      0   5915      0
             115U12-    12                  780
             115U12-    12                  780
             115U12-    12                  780
             115U12-    12                  780
             115U12-    12                  780
             115U155   155                 2015
                                                         (All inflow)    102
                                                         A24   116        20
                                                         A26   124        82
                                                                             (All outflow)     0

116    -15.73 (All)     155    100      0   2015      0
             116U155   155                 2015
                                                         (All inflow)     93
                                                         A23   114        93
                                                                             (All outflow)   148
                                                                             A24   115        20
                                                                             A28   119       128

117      0.99 (All)       0      0      0      0      0
                                                         (All inflow)    121
                                                         A30   122       121
                                                                             (All outflow)   121
                                                                             A29   118       121

118      0.00 (All)      33    333      0    231      0
             118U400     33                  231
                                                         (All inflow)    300
                                                         A29   117       121
                                                         A31-1 121        89
                                                         A31-2 121        89
                                                                             (All outflow)     0

119    -17.45 (All)       0      0    181      0 181000
                                                         (All inflow)    128
                                                         A28   116       128
                                                                             (All outflow)   128
                                                                             A32-1 120        64
                                                                             A32-2 120        64

120    -18.93 (All)       0    128      0      0      0
                                                         (All inflow)    128
                                                         A32-1 119        64
                                                         A32-2 119        64
                                                                             (All outflow)     0

121      1.35 (All)       0      0      0      0      0
             121U400     0                    0
                                                         (All inflow)    179
                                                         A34   122       179
                                                                             (All outflow)   179
                                                                             A31-1 118        89
                                                                             A31-2 118        89

122      8.43 (All)     300      0      0    150      0
             122U50-    50                   25
             122U50-    50                   25
             122U50-    50                   25
```

```
              122U50-    50                  25
              122U50-    50                  25
              122U50-    50                  25
                                                        (All inflow)      0
                                                                            (All outflow)   300
                                                                            A30   117       121
                                                                            A34   121       179

123     13.42 (All)       0      0      0      0      0
              123U155     0                  0
              123U155     0                  0
              123U350     0                  0
                                                        (All inflow)    265
                                                        AB3   217       265
                                                                            (All outflow)   265
                                                                            A22   113       265

124    -13.43 (All)       0      0      0      0      0
                                                        (All inflow)     82
                                                        A7    103        82
                                                                            (All outflow)    82
                                                                            A26   115        82

201      2.94 (All)     192      0    108   6632 108000
              201U20-    20                2100
              201U20-    20                2100
              201U76-    76                1216
              201U76-    76                1216
                                                        (All inflow)      0
                                                                            (All outflow)   192
                                                                            B1    202        77
                                                                            B2    203        16
                                                                            B3    205        99

202      2.29 (All)     192     97      0   6632      0
              202U20-    20                2100
              202U20-    20                2100
              202U76-    76                1216
              202U76-    76                1216
                                                        (All inflow)     77
                                                        B1    201        77
                                                                            (All outflow)   172
                                                                            B4    204        76
                                                                            B5    206        96

203      0.88 (All)       0      0    180      0 180000
                                                        (All inflow)     81
                                                        B2    201        16
                                                        AB1   107        65
                                                                            (All outflow)    81
                                                                            B6    209        63
                                                                            B7    224        18

204     -3.58 (All)       0     74      0      0      0
                                                        (All inflow)     76
                                                        B4    202        76
                                                                            (All outflow)     2
                                                                            B8    209         2

205     -2.21 (All)       0      0     71      0  71000
                                                        (All inflow)     99
                                                        B3    201        99
                                                                            (All outflow)    99
                                                                            B9    210        99

206     -9.02 (All)       0    136      0      0      0
                                                        (All inflow)    136
                                                        B5    202        96
                                                        B10   210        40
                                                                            (All outflow)     0

207     -1.32 (All)     240    125      0  13200      0
              207U100    80                4400
              207U100    80                4400
              207U100    80                4400
                                                        (All inflow)      0
                                                                            (All outflow)   115
                                                                            B11   208       115

208     -5.62 (All)       0    115     56      0  56000
                                                        (All inflow)    134
```

```
                                                        B11   207       115
                                                        B12-1 209        19
                                                                            (All outflow)    19
                                                                            B13-2 210        19

209     -3.68 (All)       0      0    175      0 175000
                                                        (All inflow)     64
                                                        B6    203        63
                                                        B8    204         2
                                                                            (All outflow)    64
                                                                            B12-1 208        19
                                                                            B14   211         5
                                                                            B15   212        40

210     -7.56 (All)       0    195      0      0      0
                                                        (All inflow)    235
                                                        B9    205        99
                                                        B13-2 208        19
                                                        B16   211        76
                                                        B17   212        40
                                                                            (All outflow)    40
                                                                            B10   206        40

211     -3.90 (All)       0      0      0      0      0
                                                        (All inflow)     76
                                                        B14   209         5
                                                        B19   214        71
                                                                            (All outflow)    76
                                                                            B16   210        76

212     -5.62 (All)       0      0      0      0      0
                                                        (All inflow)     40
                                                        B15   209        40
                                                                            (All outflow)    40
                                                                            B17   210        40

213    -13.42 (All)       0    265      0      0      0
             213U197     0                    0
             213U197     0                    0
             213U197     0                    0
                                                        (All inflow)    265
                                                        B22   223       265
                                                                            (All outflow)     0

214     -2.16 (All)       0      0    194      0 194000
             214SC       0                    0
                                                        (All inflow)     71
                                                        B23   216        71
                                                                            (All outflow)    71
                                                                            B19   211        71

215     -0.56 (All)     215    317      0   5915      0
             215U12-    12                  780
             215U12-    12                  780
             215U12-    12                  780
             215U12-    12                  780
             215U12-    12                  780
             215U155   155                 2015
                                                        (All inflow)    102
                                                        B24   216        84
                                                        B26   224        18
                                                                            (All outflow)     0

216      0.27 (All)     155      0    100   2015 100000
             216U155   155                 2015
                                                        (All inflow)      0
                                                                            (All outflow)   155
                                                                            B23   214        71
                                                                            B24   215        84

217     24.86 (All)       0      0      0      0      0
                                                        (All inflow)    265
                                                        B29   218       265
                                                                            (All outflow)   265
                                                                            AB3   123       265

218     27.03 (All)     198    333      0   1386      0
             218U400   198                 1386
                                                        (All inflow)    400
                                                        B31-1 221       200
                                                        B31-2 221       200
```

```
                                                                                  (All outflow)   265
                                                                                  B29   217       265

219      0.27 (All)       0      0    181      0 181000
                                                          (All inflow)      0
                                                                                  (All outflow)     0

220      0.27 (All)       0      0    128      0 128000
                                                          (All inflow)      0
                                                                                  (All outflow)     0

221     30.05 (All)     400      0      0   2800      0
              221U400   400                 2800
                                                          (All inflow)      0
                                                                                  (All outflow)   400
                                                                                  B31-1 218       200
                                                                                  B31-2 218       200

222      0.00 (All)       0      0      0      0      0
              222U50-     0                    0
              222U50-     0                    0
              222U50-     0                    0
              222U50-     0                    0
              222U50-     0                    0
              222U50-     0                    0
                                                          (All inflow)      0
                                                                                  (All outflow)     0

223      0.00 (All)     265      0      0   3445      0
              223U155   110                 1430
              223U155   155                 2015
              223U350     0                    0
                                                          (All inflow)      0
                                                                                  (All outflow)   265
                                                                                  B22   213       265

224      0.00 (All)       0      0      0      0      0
                                                          (All inflow)     18
                                                          B7    203        18
                                                                                  (All outflow)    18
                                                                                  B26   215        18
-------------------------------------------------------------------------------------------------------
Totals:       Gen.     3184   3184   2516  76800 2.5E+6 Inflow         4893 Outflow        4893
```

Initial Distribution List

1. Research Office (Code 09).....1
   Naval Postgraduate School
   Monterey, CA 93943-5000

2. Dudley Knox Library (Code 013).....2
   Naval Postgraduate School
   Monterey, CA 93943-5002

3. Defense Technical Information Center.....2
   8725 John J. Kingman Rd., STE 0944
   Ft. Belvoir, VA 22060-6218

4. Richard Mastowski (Editorial Assistant).....2
   Department of Operations Research
   Naval Postgraduate School
   Monterey, CA 93943

5. Darrell Darnel.....3
   U.S. Department of Justice
   Office of Justice Programs
   810 Seventh St., NW
   Washington, DC 20531
   darnelld@ojp.usdoj.gov

6. Paul Stockton, Code 04.....1
   Department of Operations Research
   Naval Postgraduate School
   Monterey, CA 93943
   pstockton@ojp.usdoj.gov

7. Ted Lewis, Code CS/Lt.....1
   Department of Computer Science
   Naval Postgraduate School
   Monterey, CA 93943-5118

8. Javier Salmeron, Code OR/Sa.....3
   Department of Operations Research
   Naval Postgraduate School
   Monterey, CA 93943

9. Kevin Wood, Code OR/Wd.....3
   Department of Operations Research
   Naval Postgraduate School
   Monterey, CA 93943

10. Ross Baldick.....3
    Department of Electrical Engineering
    University of Texas at Austin
    Austin, TX, 78712-1084